LED element, flat front, blue, front mounting

Part no.	**M22-FLED-B**
Catalog No.	**180796**
Eaton Catalog No.	**M22-FLED-B**

Delivery program

Product range			Accessories
Single unit/Complete unit			Single unit
Description			Cage Clamp is a registered trademark of Wago Kontakttechnik GmbH/Minden, Germany
Fixing			Front fixing
Connection technique			Cage Clamp
Rated operational voltage	U_e	V	12 - 30 V AC/DC, 50/60 Hz (Standard 24 V AC/DC)
Rated operational current	I_e	mA	5 - 15
Power consumption	$P_{max.}$	W	0.26
			at 24 V
Colour			
			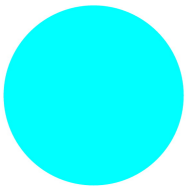
Degree of Protection			IP20
Connection to SmartWire-DT			no

Notes

For indicator lights, illuminated pushbutton actuators, and illuminated selector switch actuators, the following applies:

M22…-R only in combination with M22-FLED…-R

M22…-G only in combination with M22-FLED…-G

M22…-W only in combination with M22-FLED…-W

M22…-Y only in combination with M22-FLED…-W

M22…-B in combination with M22-FLED…-W or M22-FLED…-B

Technical data

General

Standards			IEC 60947-5-1
Climatic proofing			Damp heat, constant, to IEC 60068-2-78 Damp heat, cyclic, to IEC 60068-2-30 Dry heat to IEC 60068-2-2
Degree of Protection			IP20
Ambient temperature			
Open		°C	-25 - +70
Storage		°C	- 40 - + 85
Mounting position			As required
Terminal capacities		mm^2	
Solid		mm^2	1 x 1 (0.2 - 1.5) 1 x 1 (075 - 1.5) Can be plugged without tools

Stranded		mm^2	1 x 1 (0.2 - 1.5)
Flexible with ferrule		mm^2	1 x 1 (0.25 - 1) Use WAGO Variocrimp 4 crimping tool; please enquire for others
Solid or stranded		AWG	20

Contacts

Rated impulse withstand voltage	U_{imp}	V AC	4000
Rated insulation voltage	U_i	V	250
Overvoltage category/pollution degree			III/3
Indoor and protected outdoor installation			

Design verification as per IEC/EN 61439

Technical data for design verification			
Operating ambient temperature min.		°C	-25
Operating ambient temperature max.		°C	70

Technical data ETIM 6.0

Low-voltage industrial components (EG000017) / Lamp holder block for control circuit devices (EC000204)			
Electric engineering, automation, process control engineering / Low-voltage switch technology / Command and alarm device / Bulb socket block for command and alarm devices (ecl@ss8.1-27-37-12-09 [AKF027011])			
With integrated transformer			No
With integrated voltage decreasing resistor			No
With integrated lamp			Yes
With integrated diode			Yes
Lamp holder			None
Rated voltage Ue at AC 50 Hz		V	12 - 30
Rated voltage Ue at AC 60 Hz		V	12 - 30
Rated voltage Ue at DC		V	12 - 30
Voltage type for actuating			AC/DC
Type of lamp			LED
Connection type auxiliary circuit			Spring clamp connection
Colour lamp			Blue
Type of fastening			Front fastening

Dimensions

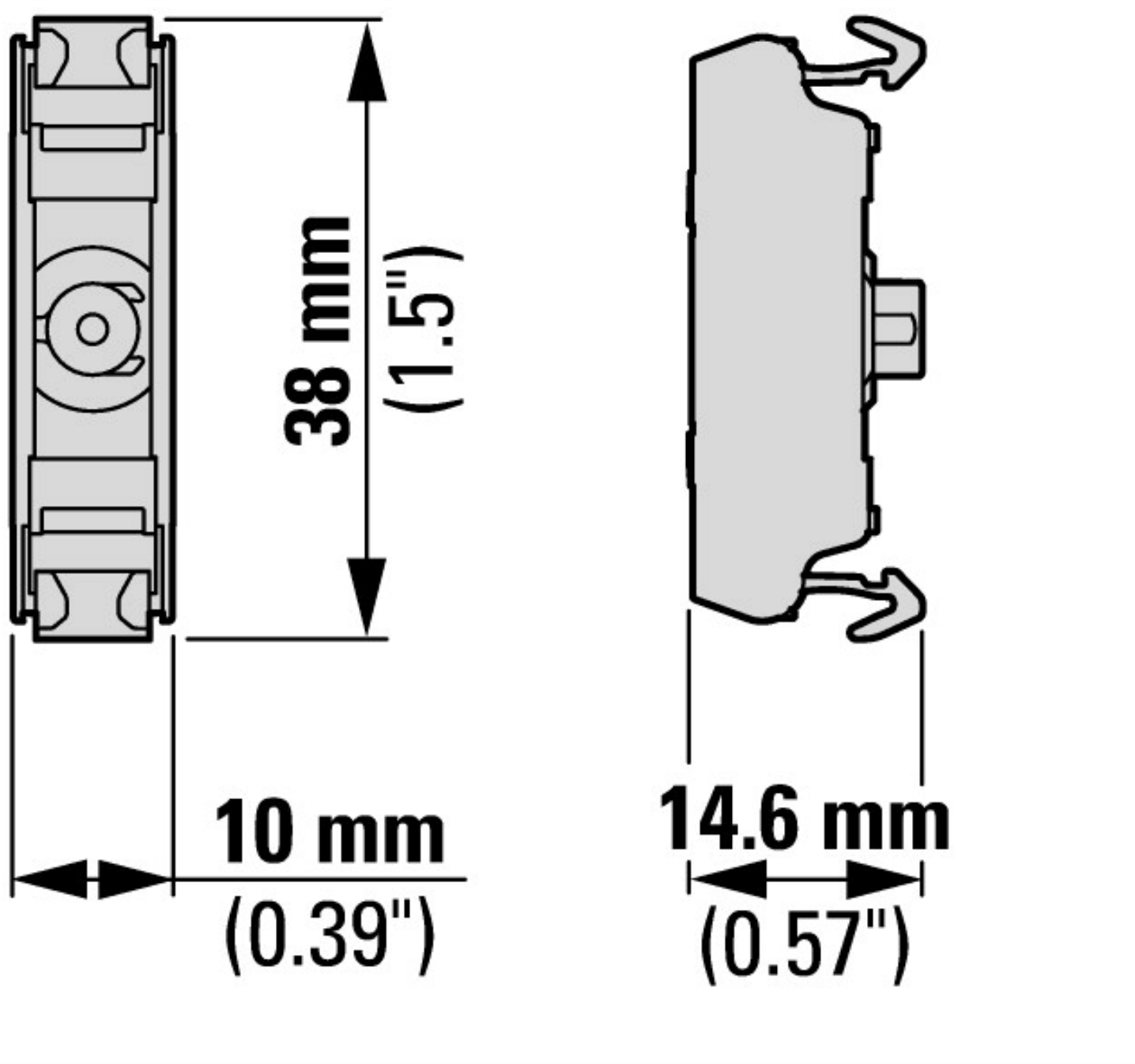

© 08/2017 by Eaton Industries GmbH